V-MOUNTS

Circular Arc Column
Electric Adjustable Desk Frame

JSD5-05

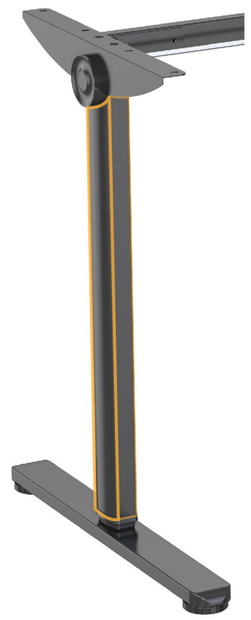

New design circular arc column,unique design.

Controller with memory height, easier adjustment.

Height-adjustable feet, fine-tuning the height.

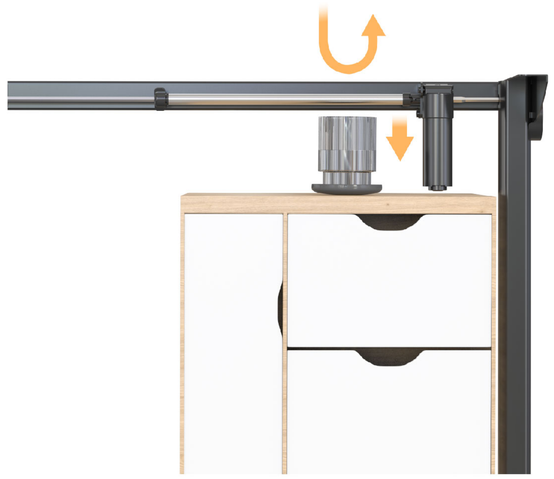

The collision detection function ensures safety of use.

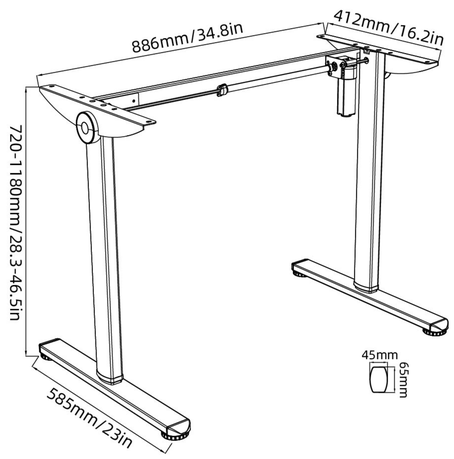

Model No.	JSD5-05
Max. Load Capacity	70KG/154lbs
Height Range	720-1180mm/28.3-46.5 in
Foot Size	585x60x20mm/23×2.3×0.7in
Color	White/Black/Gray
Material	Steel, Plastic