V-MOUNTS

V-mounts

Pneumatic Arm Single Monitor Desk Mount

Over 50,000 exercise tests

Maximum Arm Extension: 23"

Clear Cable Managerment

Powerful Pneumatic Arm

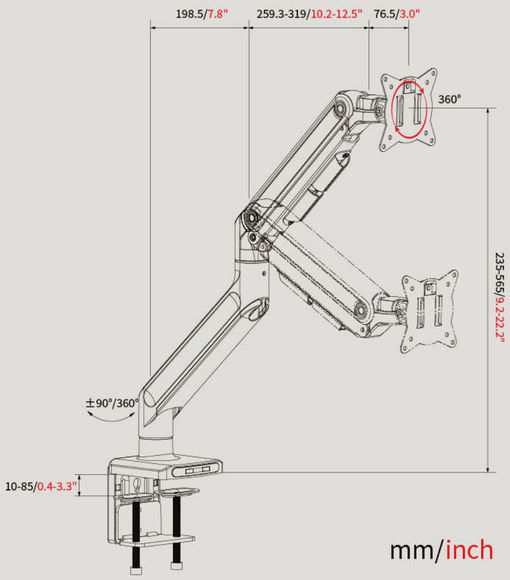

Model number	VM-GE71
Load capacity	0~20kgs/0-44lbs
Material	Iron, Aluminum alloy, plastic
Screen size	15''—42''
VESA	75*75/100*100
Height range	235-565mm
Adjustment method	Manual adjustment
Installation method	C-clamp/grommet