V-MOUNTS

Gas Spring Dual Monitor Arms

VM-GM124D

Simple installation
with no desktop replacement.

The cable routing design under the bracket arm keeps it neat and tidy .

Meet the needs of dual-screen simultaneous use .

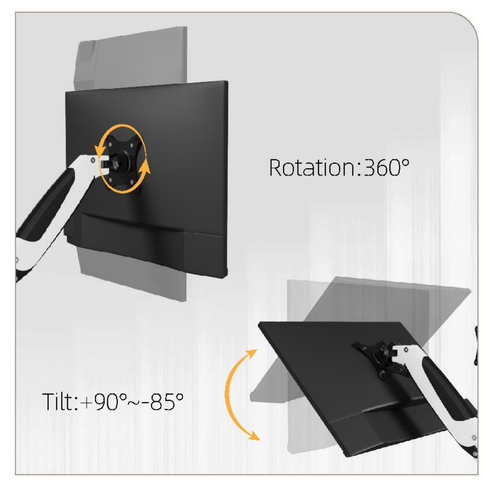

Head panel support tilt angle, horizontal and vertical rotation freely adjustable

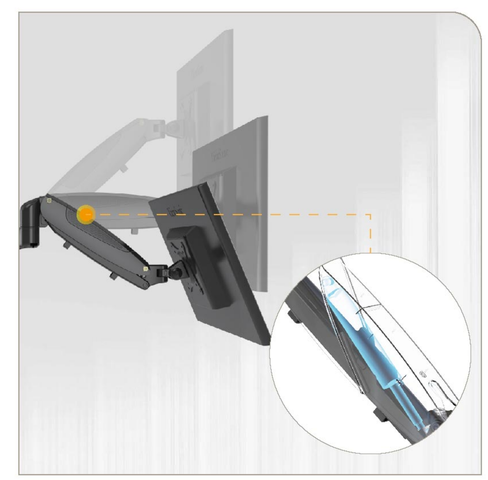

Gas spring to maintain the stability of the height adjustment elevation.

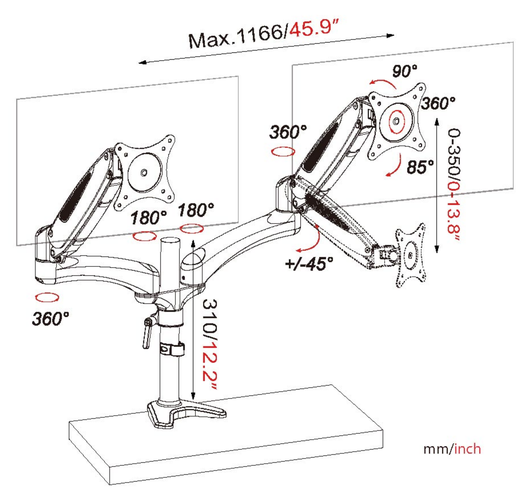

Booth No.	VM-GM124D
Max. Load capacity	17.6 lbs/screen
Screen size	15-32"
Column size	11.8 in
VESA	75×75/100×100
Color	Black、White、Gray
Material	Steel、Aluminum、Plastic