V-MOUNTS

# Height Adjustable Laptop Desk

## with Integrated Drawer and Protective Guard

**VM-FA101**

I-shaped base design prevents rollover

Headphone hook for convenient storage

Built-in gas spring,the lifting height can be adjusted freely

Effortless mobility with smooth-rolling wheels

Add a desktop edge guard with a non-slip design

Add a desktop edge guard with a non-slip design.

Headphone hook for convenient storage.

I-shaped base design prevents rollover.

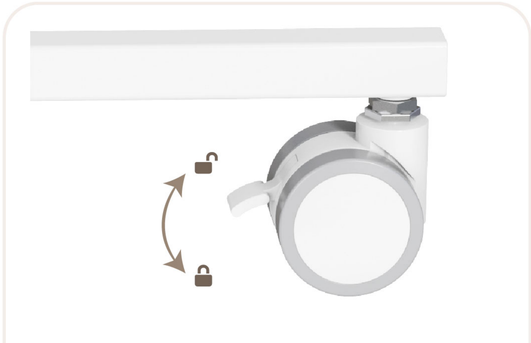

Effortless mobility with smooth-rolling wheels.

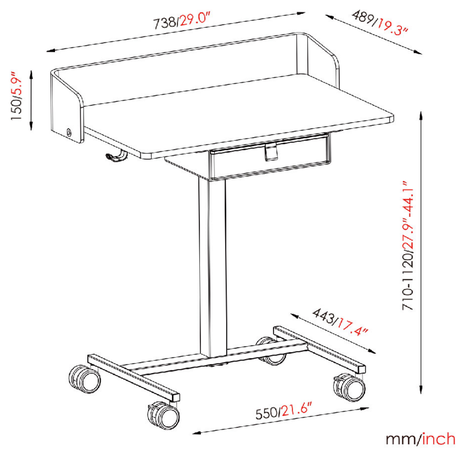


| Model No. | VM-FA101 |
|---|---|
| Max. Load Capacity | 8kg/17.6lbs |
| Desktop Size | 720x480mm/28.3x18.9in |
| Height Range | 710-1120mm/27.9-44.1in |
| Base Size | 550x443mm/21.6x17.4in |
| Frame Color | White/Black/Gray |
| Material | Steel,PB,Polyester fiber,Plastic |