V-MOUNTS

Electric Single Motor Desk with Thinner Countertop Design

JSD5-04-G9

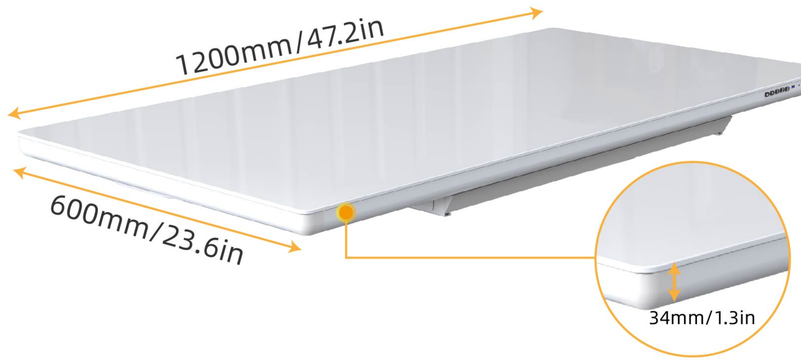

Ultra-thin tempered glass countertop design.

Partitioned drawer, organized and convenient storage.

Motorized adjustment of the ideal height for use.

The collision detection function ensures safety of use.

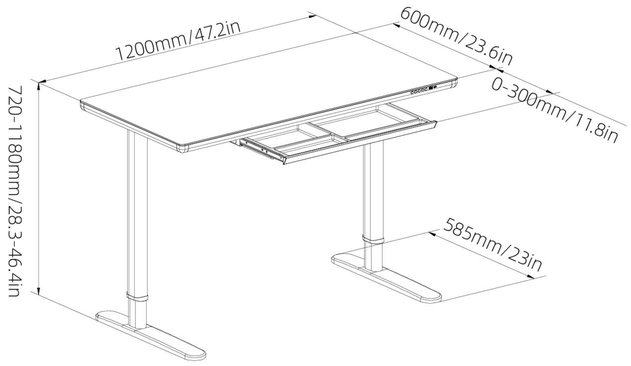

Model No.	JSD5-04-G9
Max. Load Capacity	50KG/110lbs
Desktop Size	1200x600mm/47.2x23.6in
Height Range	720-1180mm/28.3-46.4in
Table Leg Size	585x80mm/23x3.1in
Frame Color	White/Black/Gray
Material	Steel,Aluminum,Stalinite,Plastic