V-MOUNTS

Ergonomic Mobile Meeting Desks with Under-desk Tray

VM-FC201

Freely adjustable height with dual handles

Under-desk tray for convenient storage

Universal wheels for flexible movement and parking

90° reversible and adjustable desktop for use

Outstanding overall load-bearing capacity

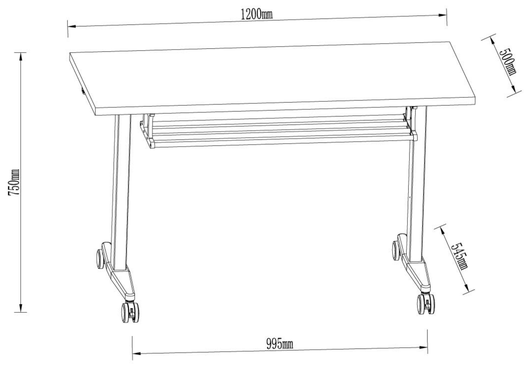

Model No.	VM-FC201
Max. Load Capacity	30KG/66.1Lbs
Outline Size	995×480×725mm/39.1×18.9×28.5 in
Base size	995×480mm/39.1×18.9 in
Color	White/Black
Material	Steel,Plastic