V-MOUNTS

L Shape Double-deck Electric Height Adjustable Desk with Drawer

JSD5-02-ZW-L-L

Double-deck desktop, larger working space.

Acrylic panels in the center of inter layer, prevent items from falling.

The atmosphere lighting can be controlled through buttons.

Memory height setting, 154lbs load capacity, fully meet daily using requirements.

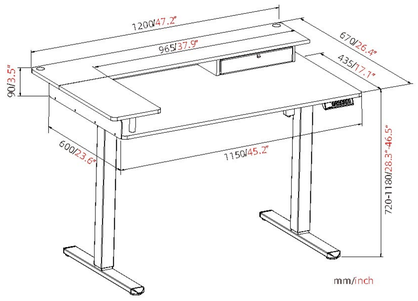

Model No.	JSD5-02-ZW-L-L
Max. Load Capacity	70KG/154Lbs
Height Range	720-1180mm/28.3-46.5 in
Color	White/Shallow wooden-grain
Material	Steel, Plastic,Particle Board,Acrylic,Cloth