V-MOUNTS

Electric Height Adjustable Desk with Generous Desktop Space

Outstanding load-bearing capacity.

Spacious desktop workspace.

Suitable for a wide range of life scenarios.

Smoothly adjustable height adjustment with four motors

Fast charging port design.
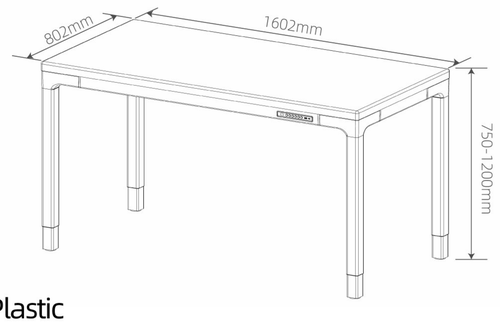
Model No.	JSD8-01-D
Max. Load Capacity	120KG/265Lbs
Height Range	750-1200mm/29.5-47.2 in
Frame Color	White/Black/Gray
Material	Steel,Solid wood,Aluminum,Plastic