V-MOUNTS

Single Motor
Width-adjustable Stretching Frame

Durable materials for long-lasting use.

Tensioned frame construction with adjustable crossbeams.

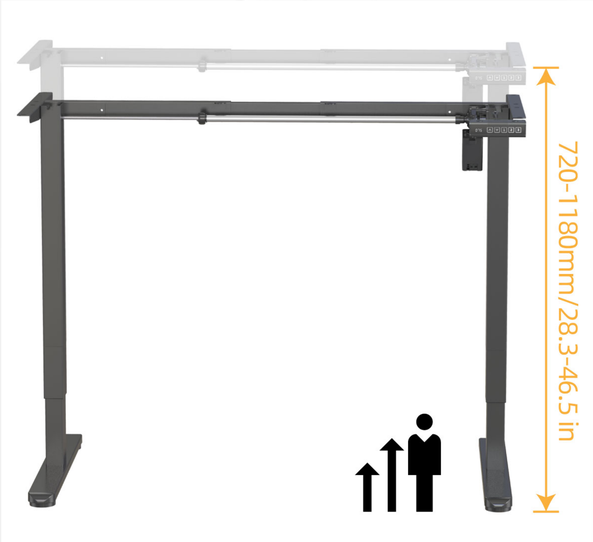

Suitable for individuals of all heights.

The collision detection function ensures safety of use.

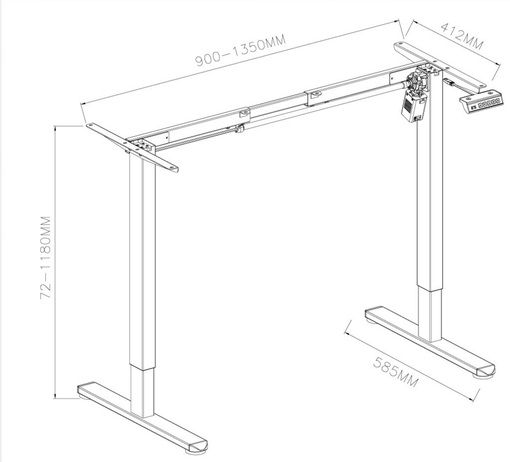

Model No.	JSD5-02-WS
Max. Load Capacity	80KG/176Lbs
Height Range	720-1180mm/28.3-46.5 in
Stretching Range	900-1350mm/35.4-53.1in
Voltage	110V-240V
Color	White/Black/Gray
Material	Steel, Plastic