V-MOUNTS

New Trending and Arrival Height Adjustable Desk with Four Motors

JSD8-03-D

Self-contained fast charging port.

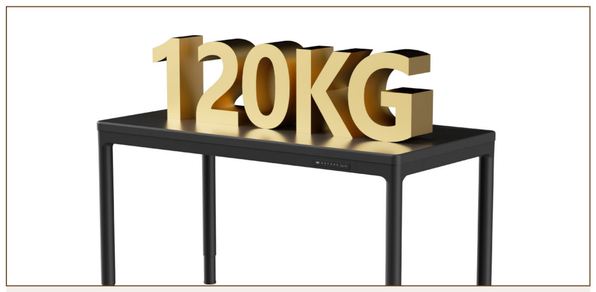

Excellent load-bearing capacity.

Adjust the height of use at the touch of a buttoncharging port.

Micro-adjustable non-slip foot pads

The collision detection function ensures safety of use.
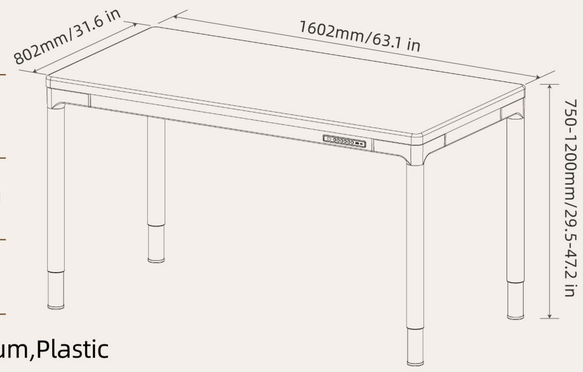
Model No.	JSD8-03-D
Max. Load Capacity	120KG/265Lbs
Height Range	750-1200mm/29.5-47.2 in
Frame Color	White/Black/Gray
Material	Steel,Solid wood, Aluminum,Plastic