V-MOUNTS

# Manual Height Adjustable Office Desk

## JSD7-02-2P

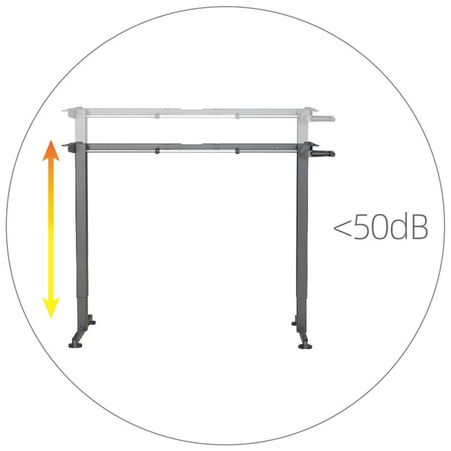


Silent height adjustment process, no disturbing.

Manual height adjustment, easy to operate.

2 split desktop to reduce packaging volume.

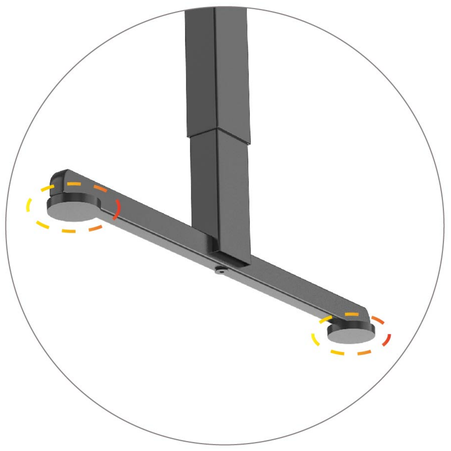

Both feet height can be fine-tuned.

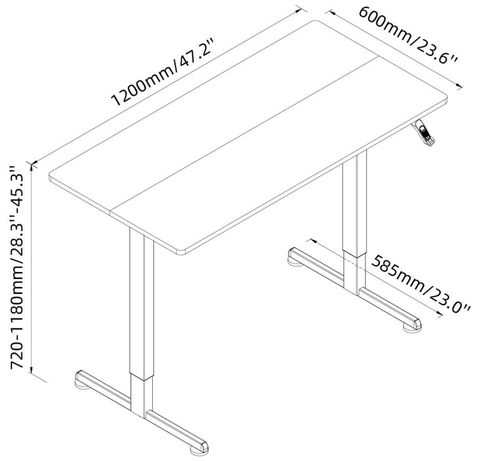


| | |
|---|---|
| Model No. | JSD7-02-2P |
| Max. Load Capacity | 50KG/110lbs |
| Desktop size | 1200×600mm/47.2×23.6in |
| Height Range | 720-1180mm/28.3-45.3 in |
| Color | White/Black/Gray |
| Material | Steel,Particle Board,Plastic |