V-MOUNTS

Dual Motor Four-legged

Height Adjustable Electric Desk Frame

JSD9-01

Suitable for a wide range of life scenarios.

Double motor and four columns to ensure smooth drive,stepless lift adjustment.

Fast charging port design.

The foot mat is adjustable in height, allowing for fine-tuning of the horizontal gap.

The collision detection function ensures safety of use.
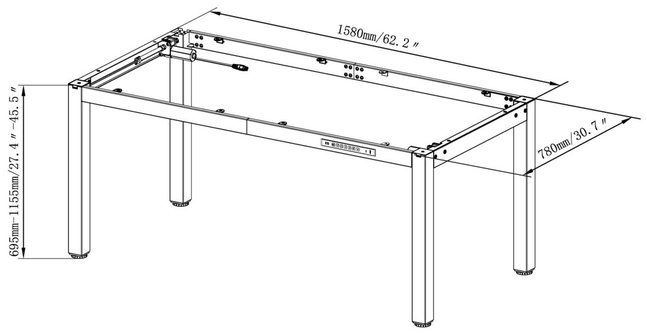
Model No.	JSD9-01
Max. Load Capacity	120KG/176Lbs
Height Range	695-1155mm/27.4-45.5 in
Lifting Height Stroke	460mm/18.1in
Color	White/Black
Material	Steel, Plastic